WLT8258

BLE module

Datasheet

V1.1

About Datasheet

The specification of WLT8258 module provides an introduction of the basic functions of WLT8258 module, including the electrical specification, RF performance, pin size, and design of reference schematic diagram, etc. Readers can refer to this document to have a detailed understanding of the overall functional parameters of the module application, please log in http://www.wi-linktech.com/ or contact our company or customer service.

To obtain the module samples and development board, please login to Alibaba international site https://www.alibaba.com/ search WLT8258 for purchase. Or contact our customer service at http://www.wi-linktech.com/.

Revision History

Version information management

The version number	time	Update record	editors
V1.0	2019.2.15	The initial release	
V1.1	2019.3.12	Overview, specification, pin specification, reference design	

directory

About Datasheet....2
Revision History....2
1. Summary....4
1.1 Functions....4
1.2 Application fields....6
2. Electrical specifications....7
3. The Bluetooth specification....8
4. Pin description....11
4.1 Pin assignment....11
4.2 Pin definition....12
4.3 UART interface....13
5. Reference design....14
5.1 Reference schematic....14
5.2 Module dimension....15
5.3 Matters needing attention....15
5.4 Object diagram of module....16
6. Reflux parameter recommendation....17
7. Software applications....18

1. Summary

1.1 Functions

WLT8258 is a small, low-cost Bluetooth BLE standard pass-through module designed by Wi-linktech.

Module supports BLE (Up to Bluetooth 5.0) and BLE Mesh. Built-in 512kB FLASH supports dynamic stack and protocol Profile configuration. Product functionality can be configured by software, providing ultimate flexibility. It also supports hardware OTA upgrade and multi-boot switch, allowing convenient product function launch and upgrade.

The features of this module are as follows:

- Built-in high performance 32-bit MCU, 512KB Flash, 64KB SRAM
- Comply with Bluetooth 5.0 standard, RF link data up to 2Mbps
- Transmission power: maximum +10dBm
- Receiving sensitivity
  - - 96 DBM @ BLE 1 MBPS
  - 99.5 DBM @ IEEE802.15.4 250 KBPS
  - - 93 DBM @ BLE 2 MBPS mode
  - - 99 DBM @ 500 KBPS BLE mode
  - - 101 DBM @ 125 KBPS BLE mode
- Support UART interface
- Support AT instruction
- Support APP parameter configuration
- Onboard high performance PCB antenna, and support external antenna
- Stamp hole pin, easy and reliable welding
- Super small package: 11.2x16mm
- Operating temperature: -40℃~+85℃

WLT8258 module only needs to connect VCC, GND, TX and RX to complete data transmission function. It also supports the use of the AT instruction to modify the default name and other related parameters (see the WLT8258 user manual for details).

After the module configuration is completed, pass-through function can be tested with relevant mobile phone software. Android users can download Wi-linktech's official test software "Wi-linktech test software" by searching baidu's mobile assistant. Apple users recommend using the mobile store's light blue, as shown in figure 1:

Figure 1

Wi-linktech has been engaged in the Bluetooth field for many years, with strong research and development strength, which can easily realize the interconnection of users' Bluetooth devices, data transmission and other applications. Based on the standard version of WLT8258, our company can customize and design Bluetooth modules that meet the requirements of customers, and provide corresponding software and hardware support. For details, please contact our company at http://www.wi-linktech.com/ or customer service.

1.2 Application fields

Personal equipment:

Wearable, mouse and keyboard, remote control toys;

Retail logistics:

Electronic shelf label, cold chain transport;

Smart home:

Lighting, sensor, intelligent lock, remote control, lawn mower, voice control, intelligent printer, lift table and chair;

Industrial control:

Security monitoring, special printers, medical equipment;

2. Electrical specifications

■ Maximum rated parameter

Item	Symbol	Min	Max	Unit
The power supply voltage	VDD	0.3	3.6	V
Pin input voltage	Vin	0.3	VDD + 0.3	V
Pin output voltage	Vout	0	VDD	V
Storage temperature	Tstr	- 65.	150	°C
Welding temperature	Tsld	-	260	°C

Note:

1) The listed electrical characteristics are target specifications for reference only. Some data may be updated based on actual test results.

2) The voltage value shown is based on GND in the module. Any voltage exceeding the maximum rating may cause permanent damage to the equipment.

■ Recommended operating conditions

Item	Symbol	Min	Typ.	Max	Unit
The power supply voltage	VDD	1.8	3.3	3.6	V
Power supply voltage rise time (from 1.6v to 2.8v)	The TR	-	-	10	ms
Operating temperature range	Topr	- 40	-	85	°C

■ Working current (VDD= 3.3v, T=25℃)

Item	Sym.	Min	Typ.	Max	Unit	Condition
RX current	IRx	-	5.3	-	mA	Whole Module Working
TX current	ITx	-	4.8	-	mA	Whole Module Working @0dbm With DCDC enable
Sleep patterns		-	1.2	-	uA	

■ Pin input/output characteristics (VDD= 3.3v, T=25℃)

Item	Sym.	Min	Typ.	Max	Unit	Condition
Input high level	VIH	0.7 VDD	-	VDD	V	
Input low level	VIL	VSS	-	0.3 VDD	V	
Output high level	VOH	0.9 VDD	-	VDD	V	
Output low level	VOL	VSS	-	0.1 VDD	V	

■ RF performance parameter

Item	Sym.	Min	Typ.	Max	Unit	Condition
Frequency range	Freq.	2380	-	2500	MHz	1MHz programmable frequency interval
Data rate	BLE/2.4G of Proprietary 1Mbps, ±250kHz deviation BLE/ 2.4g Proprietary 2Mbps, ±500kHz deviation BLE 125 KBPS, plus or minus 250 KHZ deviation BLE 500 KBPS, plus or minus 250 KHZ deviation					

3. The Bluetooth specification

■ BLE 1Mbps RF_Rx performance (±250kHz deviation)

Item	Sym.	Min	Typ.	Max	Unit	Condition
The sensitivity	1 MBPS	-	- 96.	-	dBm	
Frequency offset error	-	- 250.	-	+ 300	KHz	
Same frequency suppression	-	-	- 11	-	dB	Received signal strength -67dBm
Image reject	-	-	37	-	dB	Received signal strength -67dBm
Intra-band blocking rejection (modulation interference)	±1 MHz offset	-	1/3	-	dB	Received signal strength -67dBm
	±2 MHz offset	-	37/39	-	dB	
	> = 3 MHz offset	-	42	-	dB	

■ BLE 1Mbps RF_Tx performance

Item	Sym.	Min.	Typ.	Max.	Unit	Condition
Maximum output	-	-	10	-	dBm	
Minimum output	-	-	- 45	-	dBm	
Programmable power output range	-	55			dBm	
20dB modulation bandwidth	-	-	2.5	-	MHz	

■ BLE 2Mbps RF_Rx performance (±500kHz deviation)

Item	Sym.	Min.	Typ.	Max.	Unit	Condition
The sensitivity	2 Mbps	-	- 93.	-	dBm	
Frequency offset error	-	- 300.	-	+ 200	KHz	
Same frequency suppression	-	-	- 10	-	dB	Received signal strength -67dBm
Image reject	-	-	25	-	dB	Received signal strength -67dBm
Intra-band blocking rejection (modulation interference)	±2 MHz offset	-	6/6	-	dB	Received signal strength -67dBm
	± 4 MHz offset	-	39/38	-	dB	
	> = 4 MHz offset	-	42	-	dB	

■ BLE 2Mbps RF_Tx performance

Item	Sym.	Min.	Typ.	Max.	Unit	Condition
Maximum output	-	-	10	-	dBm	
Minimum output	-	-	- 45	-	dBm	
Programmable power output range	-	55			dBm	
20dB modulation bandwidth	-	-	1.4	-	MHz	

■ BLE 500kbps RF_Rx performance (±250kHz deviation)

Item	Sym.	Min.	Typ.	Max.	Unit	Condition
The sensitivity	500 Kbps	-	- 99.	-	dBm	
Frequency offset error	-	- 150.	-	+ 50	KHz	
Same frequency suppression	-	-	- 1	-	dB	Received signal strength -67dBm
Image reject	-	-	42	-	dB	Received signal strength -67dBm
Intra-band blocking rejection (modulation interference)	±1 MHz offset	-	34/36	-	dB	Received signal strength -67dBm
	±2 MHz offset	-	42/42	-	dB	
	> = 3 MHz offset	-	42	-	dB	

■ BLE 500kbps RF_Tx performance

Item	Sym.	Min.	Typ.	Max.	Unit	Condition
Maximum output	-	-	10	-	dBm	
Minimum output	-	-	- 45	-	dBm	
Programmable power output range	-		55		dBm	
20dB modulation bandwidth	-	-	2.5	-	MHz	

■ BLE 125kbps RF_Rx performance (±250kHz deviation)

Item	Sym.	Min.	Typ.	Max.	Unit	Condition
The sensitivity	125 Kbps	-	- 101.	-	dBm	
Frequency offset error	-	- 150.	-	+ 50	KHz	
Same frequency suppression	-	-	- 3	-	dB	Received signal strength -67dBm
Image reject	-	-	42	-	dB	Received signal strength -67dBm
Intra-band blocking rejection (modulation interference)	±1 MHz offset	-	32/34	-	dB	Received signal strength -67dBm
	±2 MHz offset	-	42/42	-	dB	
	> = 3 MHz offset	-	42	-	dB	

■ BLE 125kbps RF_Tx performance

Item	Sym.	Min.	Typ.	Max.	Unit	Condition
Maximum output	-	-	10	-	dBm	
Minimum output	-	-	- 45	-	dBm	
Programmable power output range	-		55		dBm	
20dB modulation bandwidth	-	-	2.5	-	MHz	

■ Maximum transmission distance of WLT8258 module data (open space) : 110m

4. Pin description

4.1 Pin assignment

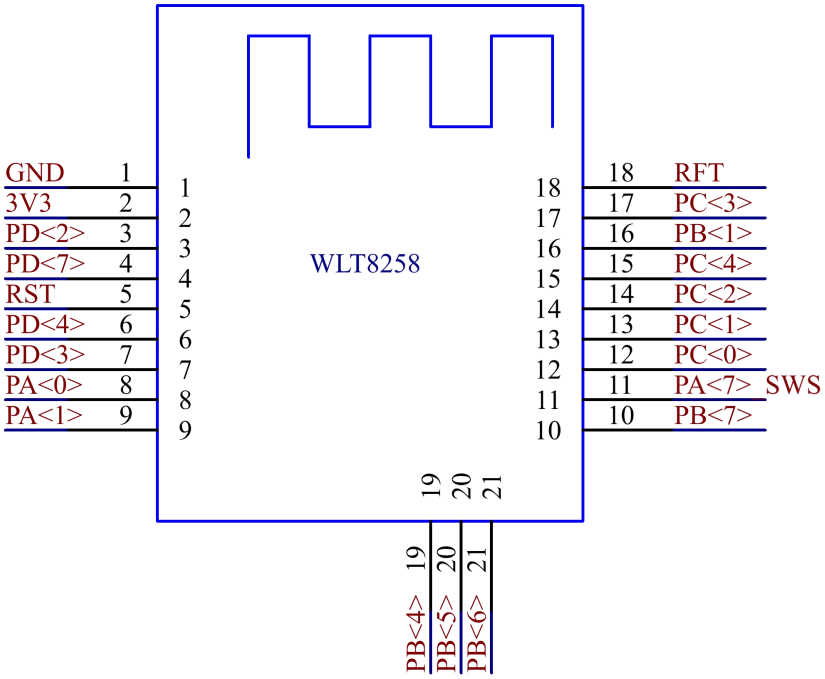

Figure 4-1 module pin diagram

Note: figure 4-1 pin functions can be redefined by pin reuse

4.2 Pin definition

PIN #	Pin name	type	describe
1	GND	The POWER	Ground
2	3 v3	The POWER	3.3 V Power Supply
3	PD < 2 >	Digital I/O	SPI_CN/I2S_LR/PWM3 / PD < 2 >
4	PD < 7 >	Digital I/O	SPI_CK I2S_BCK / 7816 _TRX/PD < 7 >
5	RST	The RESET	Power on reset, active low
6	PD < 4 >	Digital I/O	SWM/I2S_SDO/PWM2_N/PD < 4 >
7	PD < 3 >	Digital I/O	PWM1_N I2S_SDI / 7816 _TRX/PD < 3 >
8	PA < 0 >	Digital I/O	DMIC_DI/PWM0_N/UART_RX/PA < 0 >
9	PA < 1 >	Digital I/O	DMIC_CLK / 7816 _CLK/ I2S_CLK/PA < 1 >
10	PB < 7 >	Digital I/O	SDM_N1 / SPI_DO/UART_RX/lc_comp_ain < 7 > / sar_aio < 7 > / PB < 7 >
11	PA < 7 >	Digital I/O	SWS/UART_RTS/PA < 7 >
12	PC < 0 >	Digital I/O	I2C_SDA PWM4_N/UART_RTS PGA_P0 / PC < 0 >
13	PC < 1 >	Digital I/O	I2C_SCK PWM1_N/PWM0 PGA_N0 / PC < 1 >
14	PC < 2 >	Digital I/O	PWM0/7816 _TRX/I2C_SDA/XC32K_O/PGA_P1 / PC < 2 >
15	PC < 4 >	Digital I/O	PWM2 / UART_CTS/PWM0_N/sar_aio 8 > < < 4 > / by/PC
16	PB < 1 >	Digital I/O	PWM4 / UART_TX/ATSEL2 / lc_comp_ain < 1 > / sar_aio < 1 > / PB < 1 >
17	PC < 3 >	Digital I/O	PWM1 / UART_RX/I2C_SCK/XC32K_I PGA_N1 / PC < 3 >
18	RFT	ANALOG	External RF antenna outlet
19	PB < 4 >	Digital I/O	SDM_P0 PWM4 / lc_comp_ain < 4 > / sar_aio < 4 > / < 4 > in PB
20	PB < 5 >	Digital I/O	SDM_N0 PWM5 / lc_comp_ain < 5 > / sar_aio < 5 > / PB < 5 >
21	PB < 6 >	Digital I/O	SDM_P1 / SPI_DI/UART_RTS/lc_comp_ain < 6 > / sar_aio < 6 > / PB < 6 >

Note: All digital IOs can be used as GPIOs with configurable pull-up/pull-down resistors.

- SPI
  - PD < 7 > : SPI_CK
  - PB < 6 > : SPI_DI
  - PB < 7 > : SPI_DO
  - PD < 2 > : SPI_CS
- I2C
  - PC < 0 >: I2C_SDA
  - PC < 1 >: I2C_SCK
  - PC < 2 >: I2C_SDA
  - PC < 3 >: I2C_SCK

  I2C can also be multiplexed by SPI interface, that is, I2C_SDA/I2C_SCK can be multiplexed by SPI_DI /SPI_CK respectively.
- UART interface
  - PA < 0 > : UART_RX
  - PB < 1 > : UART_TX
  - PB < 7 > : UART_RX
  - PC < 3 > : UART_RX
- UART hardware flow control interface
  - PA < 7 > : UART_RTS
  - PB < 6 > : UART_RTS
  - PC < 0 > : UART_RTS
  - PC < 4 > : UART_CTS
- Single-wire debugging interface
  - PA < 7 > : SWS
  - PD < 4 > : SWM

4.3 UART interface

The module supports UART (universal asynchronous transceiver) and realizes full duplex transmission and reception through TX and RX interfaces. Support hardware flow control RTS and CTS.

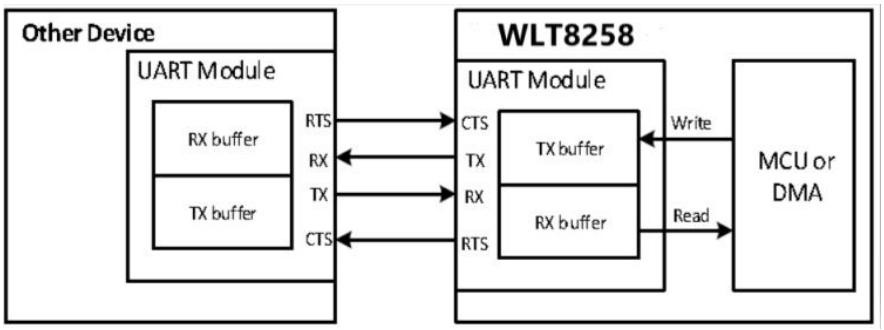

Figure 4-2 UART communication

- As shown in figure 4-2, the sent data is written to the TX buffer, and the UART module uses the TX pin to extract the data from the TX buffer transferred to other devices, the data received by the RX pin is first sent to the RX buffer and then through the MCU or DMA Read.
- If the UART's RX buffer is full, the UART module sends a signal (configurable high or low) through the RTS pin to inform other devices that they should stop sending data. Similarly, UART receives CTS foot signal, then UART should stop sending data when another device's RX buffer is nearly full.

5. Reference design

5.1 Reference schematic

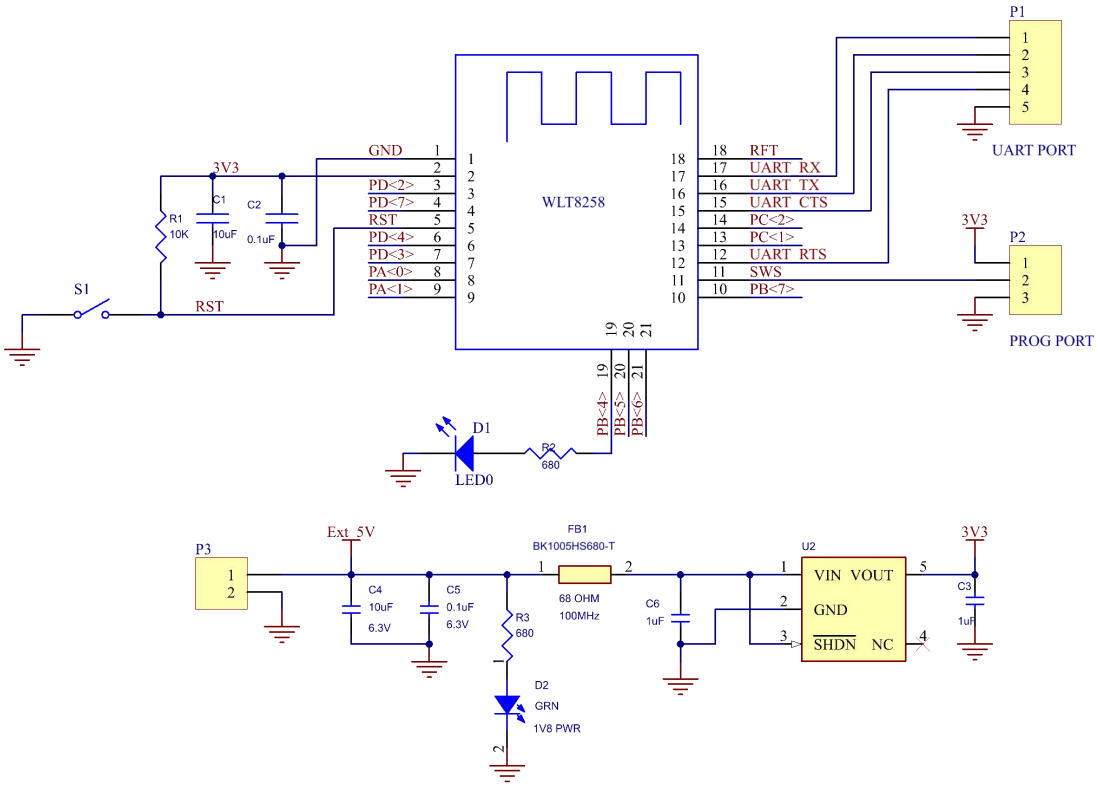

Figure 5-1 reference schematic diagram

5.2 Module dimension

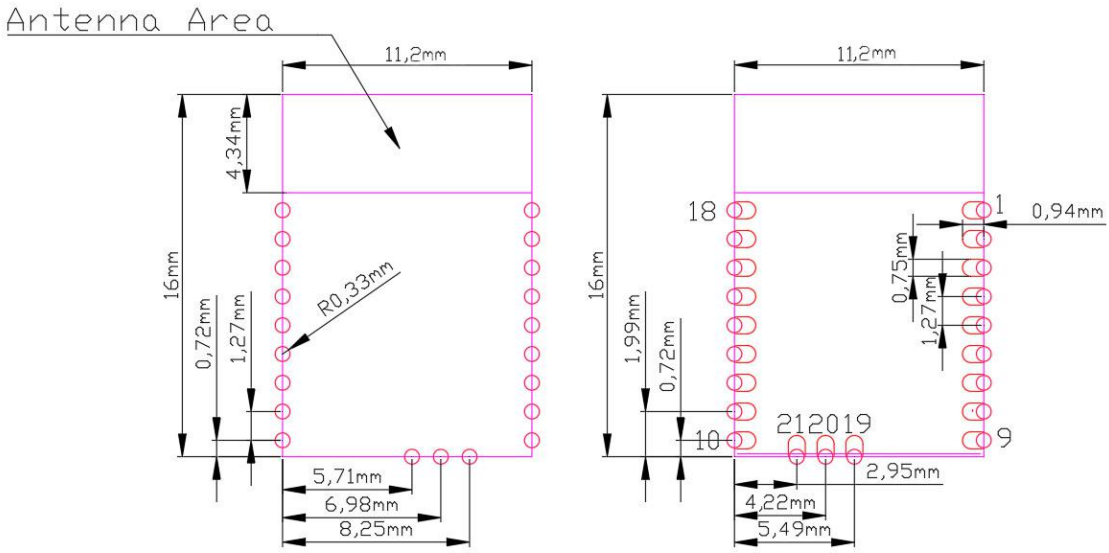

Figure 5-2 Top View (Seen from Top) Bottom View (Seen from Bottom)

Table 5-1 module design size

Module dimension	Length (X)	11.20±0.15 mm
	Width (Y)	16.00±0.15 mm
Antenna position size	Length (X)	11.20 mm
	Width (Y)	4.34 mm
The thickness of the PCB	Height (H)	0.80±0.05 mm
Total module thickness (PCB thickness + highest component height)	Height (H)	2.00 mm of typical

Note: Wi-linktech reserves the right to select components from different suppliers to achieve module functions. All mechanical and electrical specifications and module certifications are maintained. The design shall be carried out within the mechanical physical dimensions shown in FIG. 5-2.All dimensions are in millimeters (mm).

5.3 Matters needing attention

Bluetooth working at 2.4GHz frequency, should try to avoid the impact of various factors on wireless transceiver, pay attention to the following points:

- Avoid using metal in the product shell that surrounds the module. If the shell is metal, consider using an external antenna.

- Metal screws inside the product should be away from the RF part of the module.

- To maximize RF performance, the user motherboard layout should follow the following recommendations:
  1) Antenna clearance area: the user mainboard located directly below the module antenna area shall not have any copper foil wiring (including power supply, ground and signal layer).
  2) Module position: the module should ideally be placed in the corner of the user's main board, and the PCB antenna is located at the far end of the main board. This position minimizes the clearance area of the antenna.
     (Refer to the definition of antenna clearance area below)

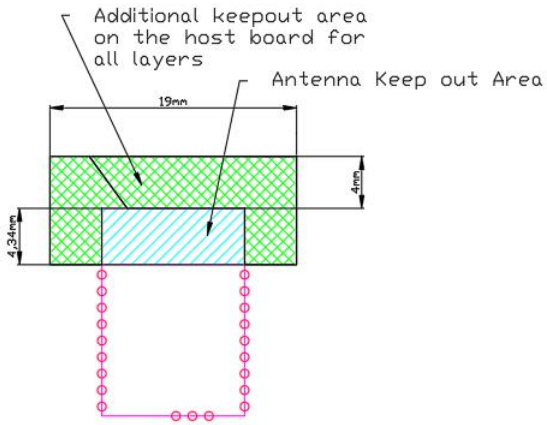

Figure 5-3 Antenna Keep out

5.4 Object diagram of module

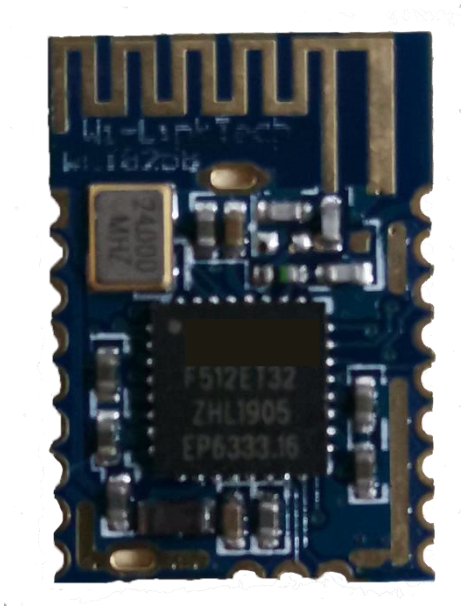

Figure 5-4 WLT8258 module

6. Reflux parameter recommendation

Backflow parameters can be set as follows:

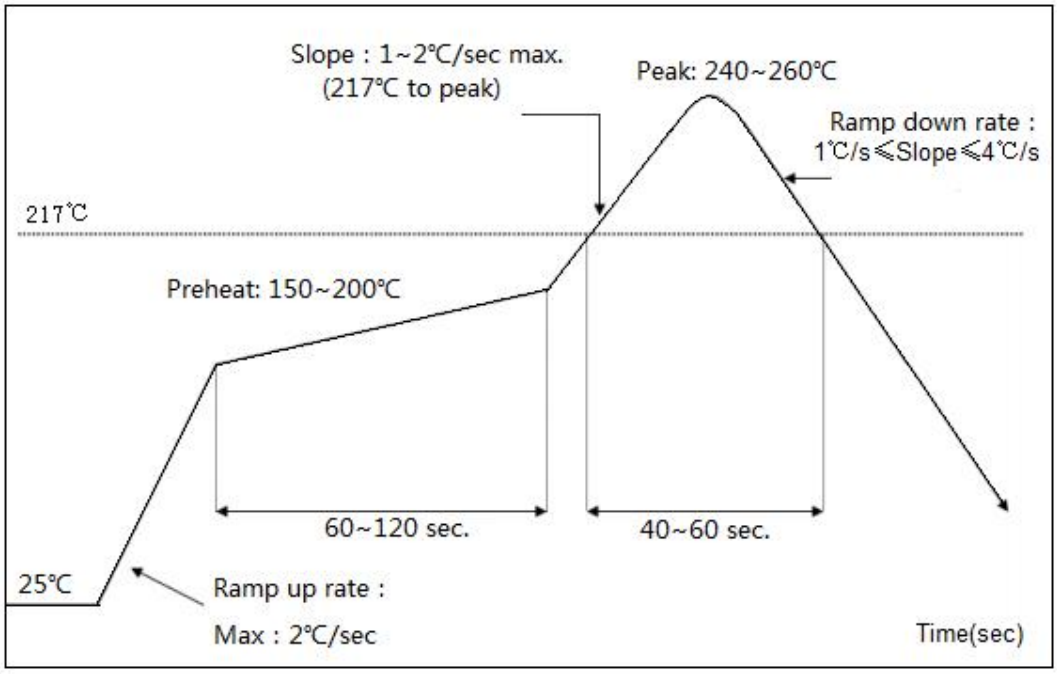

Figure 6-1 reflux recommendation curve

Temperature range	Time	The Key parameters
Preheat zone (< 150 ℃)	60-120 - s	The Ramp up rate: 2 s or less
Uniform temperature zone (150-200 ℃)	60-120 - s	The Ramp up rate: < 1 s
The Recirculation zone (> 217 ℃)	40-60 s	Peak: 240-260 ℃
Cooling zone	The Ramp down rate: 1 ℃ / s Slope or less 4 ℃ / s or less	

Table 6-1 recommended reflux parameters

7. Software applications

WLT8258 is a data transfer module that supports transparent transfer mode and command transfer mode.

AT+ instruction set means that users input commands through serial ports to configure parameters. For details of specific commands, please refer to the application documents of relevant WLT8258 module software.

WLT8258 supports customer customization, please contact our company for details.